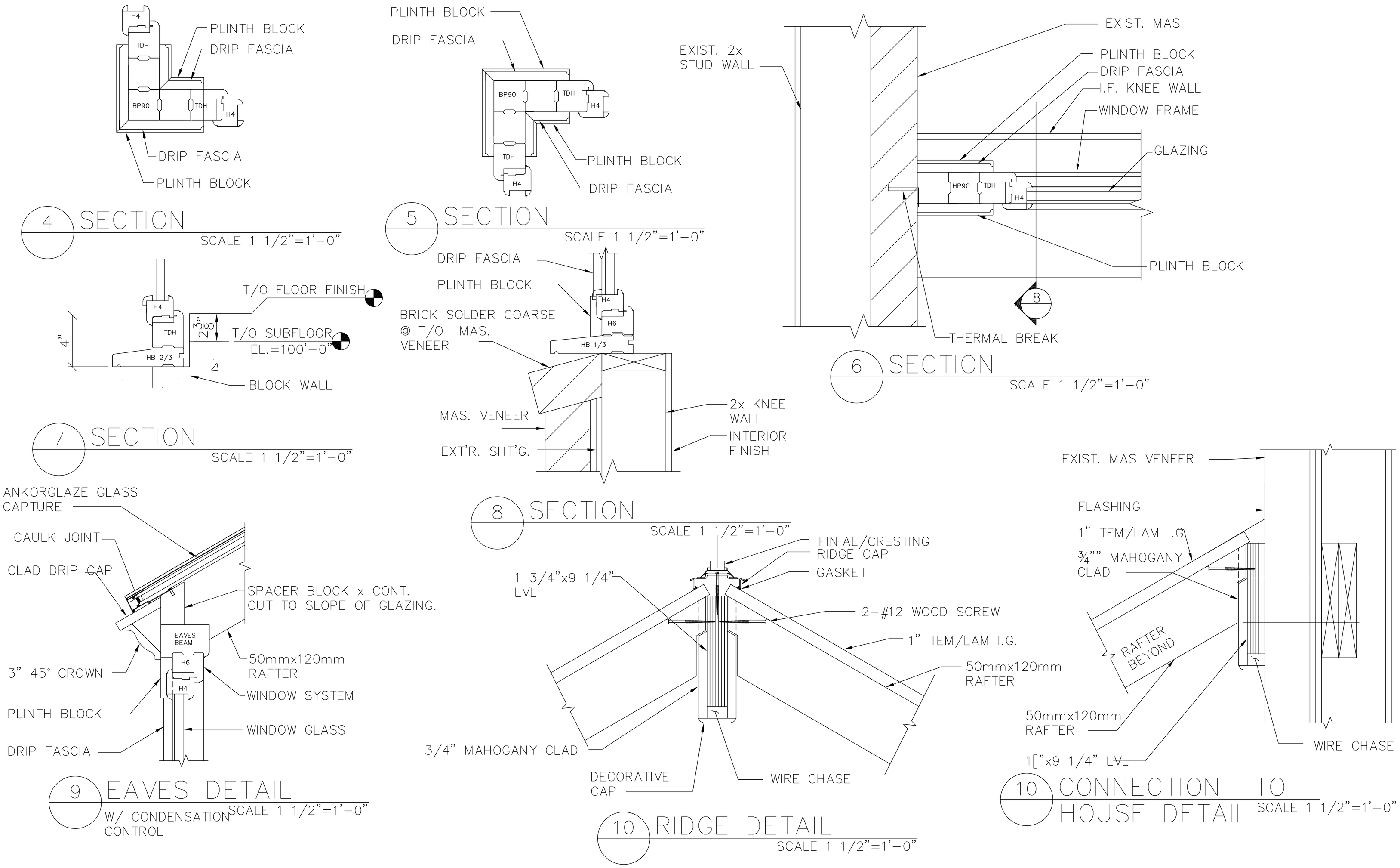

ORCHARD GARDEN ROOMS

1-888-345-7915

2229 Friendship Ln
Burnsville, MN 55337

These drawing are the exclusive property of Hewitt Holdings LLC. The drawings are created exclusively for the project named, and any reuse is prohibited. Hewitt Holdings LLC reserves all copyrights.

The drawings are for the conservatory project only. All structural items and specifications outside of the conservatory are the responsibility of the General Contractor to conform to proper codes and conditions.

ALL DIMENSIONS TO BE VERIFIED BY THE GENERAL CONTRACTOR

No.	Revision/Issue	Date

Notes

Project Name and Address

Project

Date

Scale

Sheet